65W Dual Output M2 Series

- Miniature size, high power density
- Universal AC input / full range
- High reliability
- Protections: overload/ over voltage/ short circuit
- 5 years limited warranty
- F603 129 x 98 x 40(mm)

AC input voltage range ..... 88~264VAC (124~370VDC)
Input frequency ..... 47~63Hz
Inrush current ..... cold start, 20A/115V, 40A/230V
Input leakage current ..... ＜1mA/ 230VAC
Load regulation ..... V_1: ≤ ± 0.5%, V_2: ≤ ± 10%
Output voltage adjust range ..... V_1: ± 5% of rated output voltage
Output overload protection ..... 110~150%, hiccup mode, auto recovery
Output over voltage protection ..... 115~150%, shut off, re-power on to recover
Withstand voltage ..... I/P -O/P: 3.0KVAC/1min
I/P -F/G: 1.5KVAC/1min
O/P-F/G: 0.5KVAC/1min
Rise time ..... 50ms@full load (typical)
Hold up time ..... 20ms@full load (typical)
Operating temperature ..... -20℃~+50℃
Safety standards ..... meet GB4943, UL60950, EN60950
EMC standards ..... meet GB9254, EN55022 classB, EN55024
EN61000-3-2,3,EN61000-4-2,3,4,5,6,8,11
Cooling method ..... convection

Model	DC Output		R&N	Efficiency
HF65W-DSM-A	5V	0.3~8.0A	80mV	79%
	12V	0.2~4.0A	120mV	
HF65W-DSM-B	5V	0.3~8.0A	80mV	81%
	24V	0.2~3.0A	150mV	
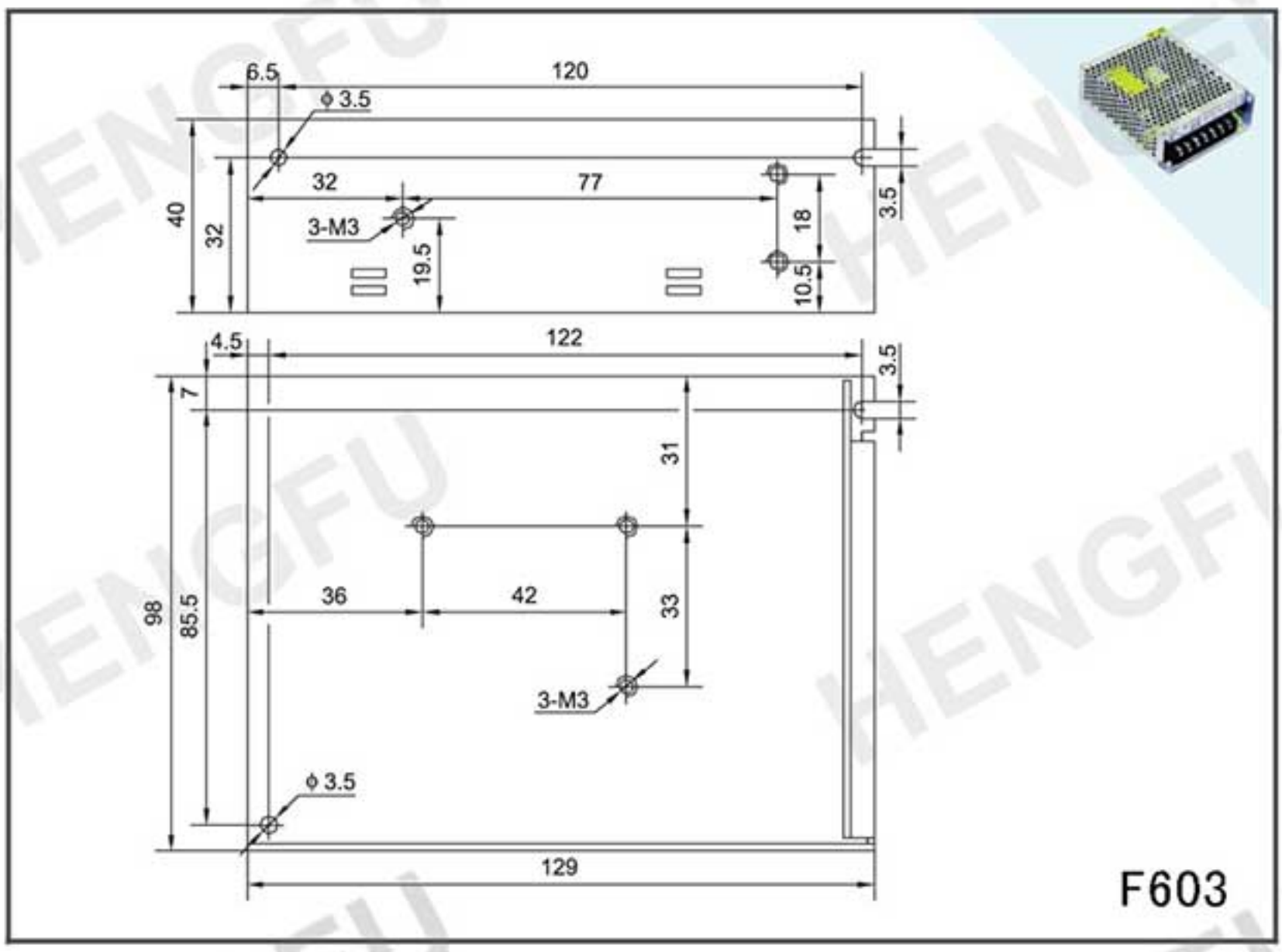
Drawing