100W Single Output Series

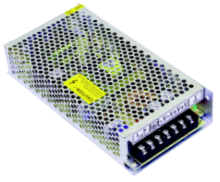

- High reliability, low cost
- Built-in EMI filter
- 100% full load burn-in test
- Protections: over current/ short circuit
- 1 year warranty
- F610 199 x 98 x 39(mm)

AC input voltage range	170~264VAC (210~370VDC)
Input frequency	47~63Hz
Inrush current	cold start, 40A/230V
Input leakage current	＜0.7mA/ 230VAC
Line regulation (full load)	≤±0.5%
Output voltage adjust range	±10%
Output over current protection	110~130%
Withstand voltage	I/P -O/P: 1.5KVAC/1min I/P -F/G: 1.5KVAC/1min O/P-F/G: 0.5KVAC/1min
Rise time	50ms@full load (typical)
Hold up time	20ms@full load (typical)
Operating temp. & humidity	-10℃~+50℃, 20%~90%RH (non condensing)
Storage temp. & humidity	-20℃~+85℃, 20%~95%RH (non condensing)
Safety standards	design meet GB4943, UL60950, EN60950
EMC standards	design meet GB9254, EN55022 classA EN61000-3-2,3, EN61000-4-2,3,4,5,6,8,11
Cooling method	convection

Model	DC Output		Load regul.	R&N	Efficiency
HF100W-S-5	5V	20.0A	0.5%	100mV	77%
HF100W-S-7.5	7.5V	13.5A	0.5%	100mV	78%
HF100W-S-12	12V	9.0A	0.5%	100mV	82%
HF100W-S-13.8	13.8V	8.0A	0.5%	100mV	82%
HF100W-S-15	15V	7.0A	0.5%	100mV	82%
HF100W-S-24	24V	5.0A	0.5%	100mV	83%
HF100W-S-48	48V	2.1A	0.5%	150mV	84%

* 3~48VDC output all available.
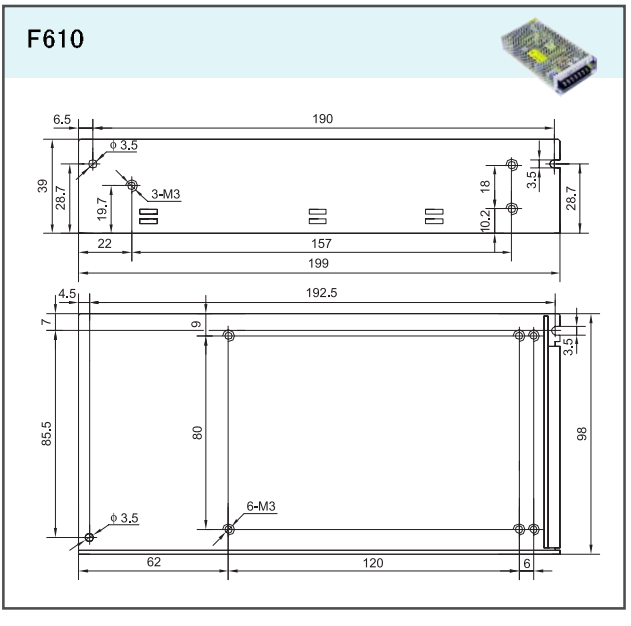
Drawing