20W Quin. Output Series

- High reliability, low cost
- Built-in EMI filter
- 100% full load burn-in test
- Protections: overload/ short circuit
- V1 is isolated from the other outputs
- 1 year warranty
- F602 111 x 78 x 36(mm)

AC input voltage range ..... 170~264VAC (210~370VDC)
Inrush current ..... cold start, 30A/230V
Input leakage current ..... ＜0.5mA/ 230VAC
Line regulation (full load) ..... ≤±0.5%
Load regulation ..... V_1: ≤± 0.5%, V_2,V_3,V_4,V_5: ≤± 3%
Output voltage adjust range ..... V_1: ± 5% of rated output voltage
Output overload protection ..... 110~150%
Withstand voltage ..... I/P -O/P: 1.5KVAC/1min
I/P -F/G: 1.5KVAC/1min
O/P-F/G: 0.5KVAC/1min
Rise, Hold up time ..... 50ms, 20ms@full load (typical)
Operating temp. & humidity ..... -10℃~+50℃, 20%~90%RH (non condensing)
Storage temp. & humidity ..... -20℃~+85℃, 20%~95%RH (non condensing)
Safety standards ..... design meet GB4943, UL60950, EN60950
EMC standards ..... design meet GB9254, EN55022 classA
Cooling method ..... convection

Model	DC Output		R&N	Efficiency
HF20W-M-A	5V	0.4~2.00A	80mV	62%
	20V	0~0.10A	150mV	
	20V	0~0.10A	150mV	
	20V	0~0.15A	150mV	
	20V	0~0.15A	150mV	
HF20W-M-B	5V	0.4~2.00A	80mV	62%
	18V	0~0.15A	120mV	
	18V	0~0.15A	120mV	
	18V	0~0.15A	120mV	
	18V	0~0.15A	120mV	
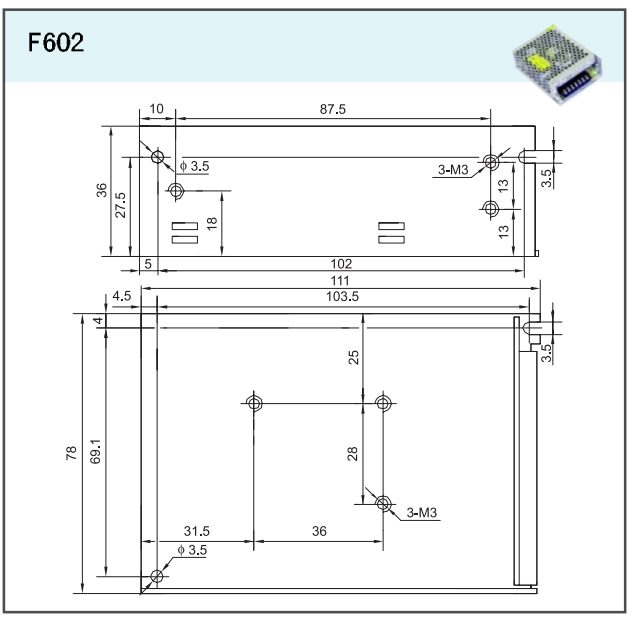
Drawing