30W Dual Output Mini-size Series

- Compact size, high reliability
- Universal AC input / full range
- 100% full load burn-in test
- 2 years warranty
- V1 is isolated from the other outputs
- Protections: overload/ over voltage/ short circuit
- F602 111 x 78 x 36(mm)

HF30W-SML

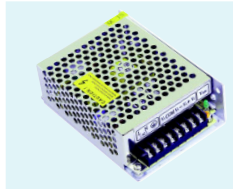

HF30W-DML, TML

AC input voltage range ..... 85~264VAC (120~370VDC)
Input frequency ..... 47~63Hz
Inrush current ..... cold start, 20A/115V, 40A/230V
Input leakage current ..... ＜0.5mA/ 230VAC
Line regulation (full load) ..... ≤±0.5%
Load regulation ..... V_1: ≤± 1%
V_2,V_3: ≤± 6%
Output voltage adjust range ..... single output:± 10%, multi-output: V_1:± 5%
Output overload protection ..... 110~150%
Output over voltage protection ..... 115~150%
Withstand voltage ..... I/P -O/P: 3.0KVAC/1min
I/P -F/G: 1.5KVAC/1min
O/P-F/G: 0.5KVAC/1min
Rise time ..... 50ms@full load (typical)
Hold up time ..... 20ms@full load (typical)
Operating temp. & humidity ..... -10℃~+50℃, 20%~93%RH (non condensing)
Storage temp. & humidity ..... -20℃~+85℃, 20%~95%RH (non condensing)
Safety standards ..... meet GB4943, UL60950, EN60950
EMC standards ..... meet GB9254, EN55022 classB
EN61000-3-2,3, EN61000-4-2,3,4,5,6,8,11
Cooling method ..... convection

Dual Output

Model	DC Output		R&N	Efficiency
HF30W-DML-A	5V	0.5~4.0A	80mV	70%
	12V	0.1~1.5A	120mV	
HF30W-DML-B	5V	0.5~4.0A	80mV	70%
	24V	0.1~1.0A	200mV	
HF30W-DML-C	12V	0.2~2.0A	100mV	72%
	-12V	0.1~1.5A	120mV	
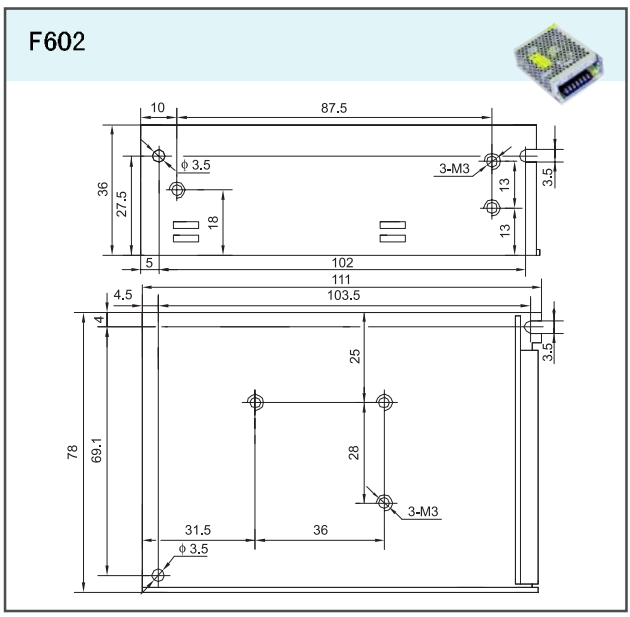
Drawing